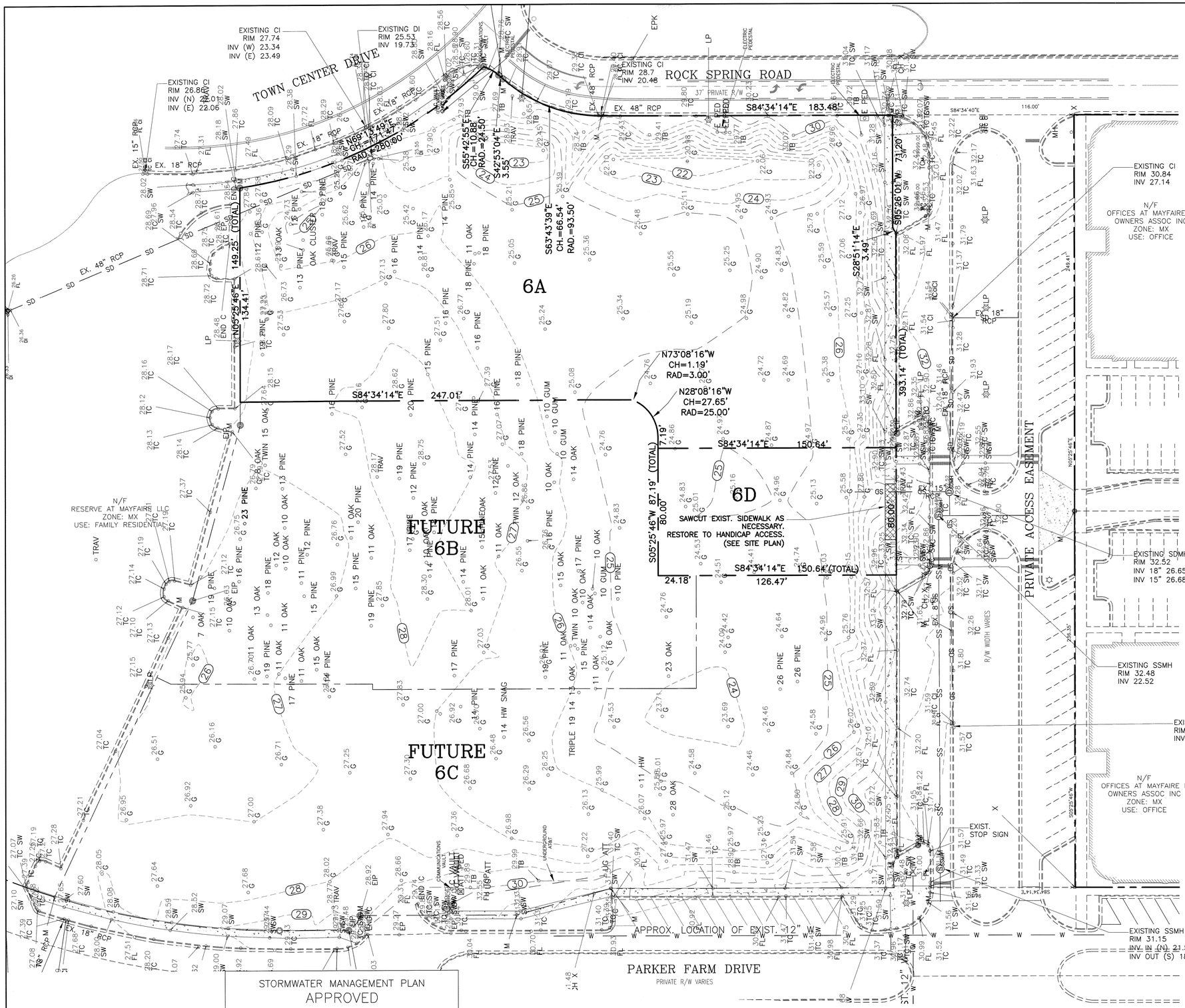

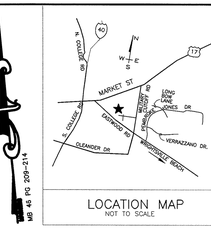

LOCATION MAP
NOT TO SCALE

REVISIONS		
No./Date	Description	By

SITE INVENTORY NOTES:

1. PREPARER OF THE PLAN: TRIPP ENGINEERING, P.C.
2. APPLICANT NAME: THE OFFICES AT MAYFAIRE IV, LLC
3. SITE ADDRESS OF THE DEVELOPMENT: 6740 ROCK SPRING ROAD
4. PROPERTY OWNER: THE OFFICES AT MAYFAIRE IV, LLC
5. DEVELOPER: THE OFFICES AT MAYFAIRE IV, LLC
6. PROPERTY BOUNDARY: SEE PLAN
   TAX PARCEL INFORMATION: R05000-003-104-000
7. PROPERTY ZONING: MX-MIXED USE DISTRICT
8. ADJACENT PROPERTY OWNER INFORMATION: SEE PLAN
9. VICINITY MAP: SEE PLAN
10. TOPOGRAPHY: SEE PLAN
11. 100-YEAR FLOOD BOUNDARY: N/A
12. EXISTING DITCHES, CREEKS AND STREAMS: SEE PLAN
13. SOIL: KR; KUREB SAND, MU; MURVILLE FINE SAND, ON; ONSLOW LOAMY FINE SAND
14. CAMA AEC: N/A
15. CAMA LAND CLASSIFICATION: WATERSHED RESOURCE PROTECTION
16. CONSERVATION RESOURCES: NONE
    ASSOCIATED SETBACKS: N/A
17. HISTORIC OR ARCHAEOLOGICAL SITE: N/A
18. CEMETERIES, BURIAL SITES/GROUNDS: N/A
19. FORESTED AREAS, HABITAT AND DOMINANT SPECIES: N/A
20. WETLANDS: NONE
21. PROTECTED SPECIES OR HABITAT: N/A
22. EXISTING OR PROPOSED THOROUGHFARES, BIKE ROUTES, PEDESTRIAN SIDEWALKS OR TRAILS AND TRANSIT FACILITIES: SEE SITE PLAN.
23. ALL TREES TO BE REMOVED ON SITE.

LEGEND

32	EXISTING CONTOUR
	PROPERTY BOUNDARY
	SITE DEMO
50.45	EXISTING ELEVATION

SITE PLAN

BAR SCALE 1"=30'

30' 15' 0' 30' 60' 90'

Approved Construction Plan		
	Name	Date
Planning		
Traffic		
Fire		

STORMWATER MANAGEMENT PLAN
APPROVED
CITY OF WILMINGTON
ENGINEERING DEPARTMENT
DATE _____ PERMIT # _____
SIGNED_____

For each open utility cut of City streets, a $325 permit shall be required from the City prior to occupancy and/or project acceptance.

TRIPP ENGINEERING, P.C.
419 Chestnut Street
Wilmington, North Carolina 28401
Phone 910-763-5100
Fax 910-763-5631
© 2016 TRIPP ENGINEERING, P.C.
PE FIRM LICENSE No. C-1429

EXISTING CONDITIONS, SITE INVENTORY AND DEMOLITION PLAN

MAYFAIRE OFFICE IV

6740 ROCK SPRING ROAD
WILMINGTON, NORTH CAROLINA

NORTH CAROLINA PROFESSIONAL SEAL 17374 ENGINEER PHILLIP GREGORY TRIPP

7-8-16

DATE	07-08-16
DESIGN	PGT
DRAWN	EJW

C1

SHEET 1 OF 4

16001

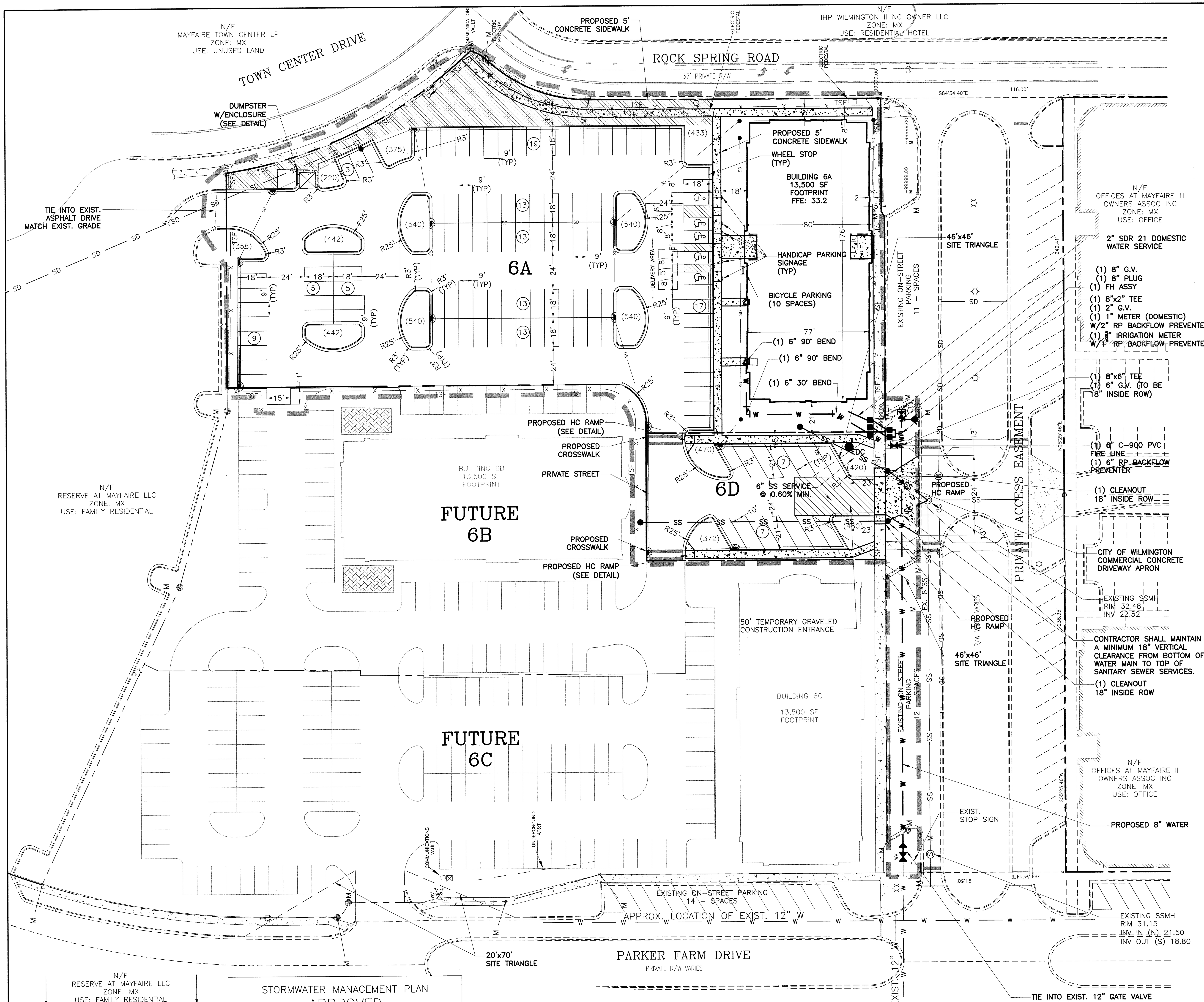

N/F
RESERVE AT MAYFAIRE LLC
ZONE: MX
USE: FAMILY RESIDENTIAL

N/F
OFFICES AT MAYFAIRE LLC COA INC
ZONE: MX
USE: OFFICE

N/F
MAYFAIRE COMMUNITY ASSN (HOA)
ZONE: MX
USE: COMMON AREA

STORMWATER MANAGEMENT PLAN
APPROVED
CITY OF WILMINGTON
ENGINEERING DEPARTMENT
DATE ________ PERMIT # ________
SIGNED________________

Approved Construction Plan	Name	Date
Planning		
Traffic		
Fire		

For each open utility cut of City streets, a $325 permit shall be required from the City prior to occupancy and/or project acceptance.

NOTES:

ZONING
1) TOPOGRAPHY COMPLETED BY PATRICK C. BRISTOW LAND SURVEYING, P.C.
2) PERMITTING OF BUSINESS IDENTIFICATION SIGNAGE IS A SEPARATE PROCESS. CITY OF WILMINGTON WILL NOT ALLOW OBSTRUCTIONS WITHIN THE RIGHT-OF-WAY.
3) CONTRACTOR SHALL FIELD VERIFY SIZE, MATERIAL, INVERTS AND LOCATION OF ALL EXISTING UTILITIES PRIOR TO INSTALLATION OF PROPOSED CONNECTIONS.
4) EXISTING EASEMENTS AS SHOWN
5) CONTRACTOR SHALL MAINTAIN ALL-WEATHER ACCESS FOR EMERGENCY VEHICLES AT ALL TIMES DURING CONSTRUCTION.
6) UNDERGROUND FIRE LINE(S) MUST BE PERMITTED AND INSPECTED BY THE WILMINGTON FIRE DEPARTMENT FROM THE PUBLIC RIGHT-OF-WAY TO THE BUILDING. CONTACT THE WILMINGTON FIRE DEPARTMENT DIVISION OF FIRE AND LIFE SAFETY AT 910-341-0696.
7) BUILDING IS TYPE IIB

SOLID WASTE
1) SITE TO USE DUMPSTER.

TRAFFIC
1) ALL PAVEMENT MARKINGS IN PUBLIC RIGHTS-OF-WAY AND FOR DRIVEWAYS ARE TO BE THERMOPLASTIC AND MEET CITY AND/OR NCDOT STANDARDS.
2) TRAFFIC CONTROL DEVICES (INCLUDING SIGNS AND PAVEMENT MARKINGS) IN AREAS OPEN TO PUBLIC TRAFFIC ARE TO MEET MUTCD (MANUAL ON UNIFORM TRAFFIC CONTROL DEVICES) STANDARDS.
3) CONTACT TRAFFIC ENGINEERING AT 910-341-7888 TO ENSURE THAT ALL TRAFFIC SIGNALS FACILITIES AND EQUIPMENT ARE SHOWN ON THE PLAN.
4) CALL TRAFFIC ENGINEERING AT 910-341-7888 FORTY-EIGHT HOURS PRIOR TO ANY EXCAVATION IN THE RIGHT-OF-WAY.
5) ANY BROKEN OR MISSING SIDEWALK PANELS, DRIVEWAY PANELS AND CURBING WILL BE REPLACED.
6) CONTACT 910-341-7888 TO DISCUSS STREET LIGHTING OPTIONS.
7) ALL TRAFFIC CONTROL SIGNS AND MARKINGS OFF THE RIGHT-OF-WAY ARE TO BE MAINTAINED BY THE PROPERTY OWNER IN ACCORDANCE WITH MUTCD STANDARDS.
8) NO ROWS TO BE CLOSED.
9) NO STREETS PROPOSED.
10) OFF SITE PARKING PROPOSED AS SHOWN.
11) DRIVEWAYS TO MEET CITY STANDARDS.
13) ALL PARKING STALL MARKINGS AND LANE ARROWS WITHIN THE PARKING AREAS SHALL BE WHITE.
14) STOP SIGNS AND STREET SIGNS TO REMAIN IN PLACE DURING CONSTRUCTION.
15) TACTILE WARNING MATS WILL BE INSTALLED ON ALL WHEELCHAIR RAMPS.

LANDSCAPING
1) A LANDSCAPING PLAN INDICATING THE LOCATION OF REQUIRED STREET TREES SHALL BE SUBMITTED TO THE CITY OF WILMINGTON TRAFFIC ENGINEERING DIVISION AND THE PARKS AND RECREATION DEPARTMENT FOR REVIEW AND APPROVAL PRIOR TO THE RECORDING OF THE FINAL PLAT.
2) NO OBSTRUCTIONS ARE PERMITTED IN THE SPACE BETWEEN THIRTY (30) INCHES AND TEN (10) FEET ABOVE THE GROUND WITHIN THE TRIANGULAR SITE DISTANCE.
3) PRIOR TO ANY CLEARING, GRADING OR CONSTRUCTION ACTIVITY, TREE PROTECTION FENCING WILL BE INSTALLED AROUND PROTECTED TREES OR GROVES OF TREES AND NO CONSTRUCTION WORKERS, TOOLS, MATERIALS, OR VEHICLES ARE PERMITTED WITHIN THE TREE PROTECTION FENCING.
4) ANY TREES AND/OR AREAS DESIGNATED TO BE PROTECTED MUST BE PROPERLY BARRICADED WITH FENCING AND PROTECTED THROUGHOUT CONSTRUCTION TO INSURE THAT NO CLEARING, GRADING OR STAGING OF MATERIALS WILL OCCUR IN THOSE AREAS.
5) NO EQUIPMENT IS ALLOWED ON SITE UNTIL ALL TREE PROTECTION FENCING AND SILT FENCING IS INSTALLED AND APPROVED. PROTECTIVE FENCING IS TO BE MAINTAINED THROUGHOUT THE DURATION OF THE PROJECT AND CONTRACTORS SHALL RECEIVE ADEQUATE INSTRUCTIONS ON TREE PROTECTION METHODS.
6) ALL PROPOSED VEGETATION WITHIN SIGHT TRIANGLES SHALL NOT INTERFERE WITH CLEAR VISUAL SIGHT LINES FROM 30"-10'.

CFPUA
1) WATER AND SEWER SERVICE SHALL MEET CAPE FEAR PUBLIC UTILITY AUTHORITY (CFPUA) DETAILS AND SPECIFICATIONS.
2) PROJECT SHALL COMPLY WITH THE CFPUA CROSS CONNECTION CONTROL REQUIREMENTS. WATER METER(S) CANNOT BE RELEASED UNTIL ALL REQUIREMENTS ARE MET AND THE STATE HAS GIVEN THEIR FINAL APPROVAL.
3) IF THE CONTRACTOR DESIRES CFPUA WATER FOR CONSTRUCTION, HE SHALL APPLY IN ADVANCE FOR THIS SERVICE AND MUST PROVIDE A REDUCED PRESSURE ZONE (RPZ) BACKFLOW PREVENTION DEVICE ON THE DEVELOPERS SIDE OF THE WATER METER BOX.
4) ANY IRRIGATION SYSTEM SUPPLIED BY CFPUA WATER SHALL COMPLY WITH THE CFPUA'S CONNECTION CONTROL REGULATION. CALL 910-332-6419 FOR INFORMATION.
5) ANY BACKFLOW PREVENTION DEVICES REQUIRED BY CFPUA WILL NEED TO BE ON THE LIST OF APPROVED DEVICES FOR USCFCCCHR OR ASSE.
6) PUBLIC WATER MAIN EXTENSION AND WATER SERVICES PROPOSED. SANITARY SEWER SERVICE PROPOSED.
7) CONTACT THE NORTH CAROLINA ONE CALL CENTER AT 1-800-632-4949 PRIOR TO DOING ANY DIGGING, CLEARING OR GRADING.
8) ANY IRRIGATION SYSTEM SHALL BE EQUIPPED WITH A RAIN AND FREEZER SENSOR.
9) CONTRACTOR TO FIELD VERIFY EXISTING WATER AND SEWER SERVICE LOCATIONS, SIZES AND MATERIALS PRIOR TO CONSTRUCTION. ENGINEER TO BE NOTIFIED OF ANY CONFLICTS.
10) A UTILITY CUT PERMIT IS REQUIRED FOR EACH OPEN CUT OF A CITY STREET. CONTACT 910-341-5888 FOR MORE DETAILS.

DRAINAGE
1) SHEET FLOW TO PROPOSED DROP INLETS TO EXISTING STORM DRAIN SYSTEM THEN TO OFFSITE STORM WATER POND 6.

UNDERGROUND UTILITIES
1) ALL ELECTRIC, CABLE TELEVISION AND TELEPHONE FACILITIES, FIRE ALARM CONDUITS, STREET LIGHTING WIRING AND OTHER WIRING CONDUITS AND SIMILAR FACILITIES SHALL BE PLACED UNDERGROUND BY THE DEVELOPER OR THE APPROPRIATE UTILITY COMPANY.
2) A MINIMUM COVER OF 30-INCHES OVER ALL PROPOSED WATER LINES SHALL BE PROVIDED.

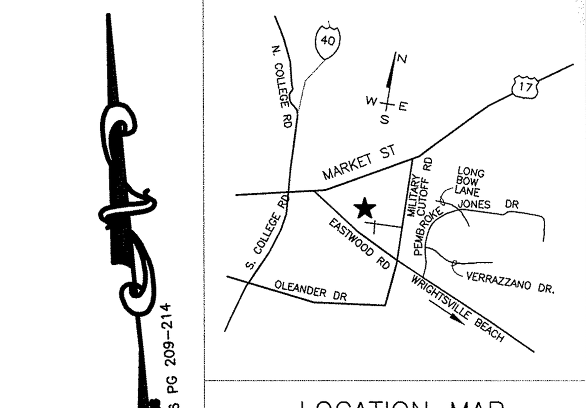

LOCATION MAP
NOT TO SCALE

SITE DATA:

PROPERTY OWNER	THE OFFICES AT MAYFAIRE IV, LLC
PROJECT ADDRESS	6740 ROCK SPRING ROAD
PIN NUMBER	R05000-003-104-000
AREA NOT IN A FEMA 100-YEAR FLOOD ZONE.	
ZONING DISTRICT	MX
DISTURBED AREA	2.35 AC
SETBACKS REQUIRED	TO BE DETERMINED BY MAYFAIRE
PROPOSED BUILDING SETBACKS	FRONT: 32' REAR: 319' SIDE: 17'/285'
TRACT AREA (6A)	76,791 SF (1.76 AC)
TRACT AREA (6D)	12,015 SF (0.27 AC)
TRACT AREA (6A+6D)	88,806 SF (2.04 AC)
BUILDING USE	OFFICE
BUILDING TYPE	IIB
EXISTING BUILDING AREA	0 SF
PROPOSED BUILDING AREA (GROSS)	40,500 SF
BUILDING LOT COVERAGE (13,500/76,791)	17.6%
NUMBER OF BUILDINGS	1
NUMBER OF UNITS	1
BUILDING HEIGHT	50'
NUMBER OF STORIES	3
SF PER FLOOR (GROSS)	
1ST FLOOR	13,500 SF
2ND FLOOR	13,500 SF
3RD FLOOR	13,500 SF
EXISTING IMPERVIOUS AREAS: (6A)	
EXISTING PAVEMENT	0 SF
EXISTING SIDEWALK	1,330 SF
EXISTING IMPERVIOUS AREA	1,330 SF (1.7%)
EXISTING IMPERVIOUS AREAS: (6D)	
EXISTING PAVEMENT	0 SF
EXISTING SIDEWALK	565 SF
EXISTING IMPERVIOUS AREA	565 SF (4.4%)
PROPOSED IMPERVIOUS AREAS: (6A)	
PROPOSED BUILDING FOOTPRINT	13,500 SF
PROPOSED PAVEMENT	43,618 SF
PROPOSED SIDEWALK	2,704 SF
EXISTING IMPERVIOUS TO REMAIN	1,330 SF
FUTURE	7,087 SF
TOTAL 6A IMPERVIOUS	68,239 SF
PROPOSED IMPERVIOUS AREAS: (6D)	
PROPOSED BUILDING FOOTPRINT	0 SF
PROPOSED PAVEMENT	8,580 SF
PROPOSED SIDEWALK	1,480 SF
EXISTING IMPERVIOUS TO REMAIN	319 SF
FUTURE	299 SF
TOTAL 6D IMPERVIOUS	10,678 SF
TOTAL 6A+6D IMPERVIOUS AREA	78,917 SF (88.9%)
TOTAL PROPOSED OFFSITE IMPERVIOUS	1,085 SF
PARKING REQUIRED:	TO BE DETERMINED BY MAYFAIRE
MINIMUM: 1/300 (40,500/300)	NO MINIMUM REQUIRED
MAXIMUM: 1/200 (40,500/200)	203 SPACES
PARKING PROVIDED:	126 SPACES
CAMA LAND USE:	WATERSHED RESOURCE PROTECTION
PUBLIC WATER AND SEWER BY CFPUA	
EXISTING WATER FLOW:	0 GPD
EXISTING SEWER FLOW:	0 GPD
PROPOSED WATER FLOW: (120 GPD/1,000 SF x 40,500 x 110%)	5,346 GPD
PROPOSED SEWER FLOW: (120 GPD/1000 SF x 40,500 SF)	4,860 GPD
HANDICAP SPOTS REQUIRED (1-25 SPOTS= 1 HANDICAP SPOT) 124 SPOTS/25=4.96	PROPOSED 5 HANIDCAP SPOTS
OPEN SPACE	5,752 SF
BICYCLE PARKING REQUIRED (124 SPACES)	10 BICYCLE PARKS
BICYCLE PARKING PROPOSED	10 BICYCLE PARKS

LEGEND

- PROPERTY LINE (BOUNDARY)
- LIMITS OF DISTURBANCE
- EXIST. CONCRETE AREA
- PROPOSED CONCRETE AREA
- OPEN SPACE

SITE PLAN
BAR SCALE 1"=30'
30' 15' 0' 30' 60' 90'

REVISIONS

No./Date	Description	By
R1 07.13.16	SHIFTED NORTH SIDEWALK	EJW
R2 08.01.16	W & CITY SW COMMENTS	MLV
R3 08.08.16	CITY TRAFFIC COMMENTS	EJW
R4 08.11.16	CITY TRAFFIC COMMENTS	EJW

SITE AND UTILITY PLAN
MAYFAIRE OFFICE IV
6740 ROCK SPRING ROAD
WILMINGTON, NORTH CAROLINA

TRIPP ENGINEERING, P.C.
419 Chestnut Street
Wilmington, North Carolina 28401
Phone 910-763-5100
Fax 910-763-5631

© 2016 TRIPP ENGINEERING, P.C.

NORTH CAROLINA PROFESSIONAL SEAL 17374 ENGINEER PHILLIP GREGORY TRIPP
7-8-16

DATE 07-08-16
DESIGN PGT
DRAWN EJW

C2

SHEET 2 OF 4

16001

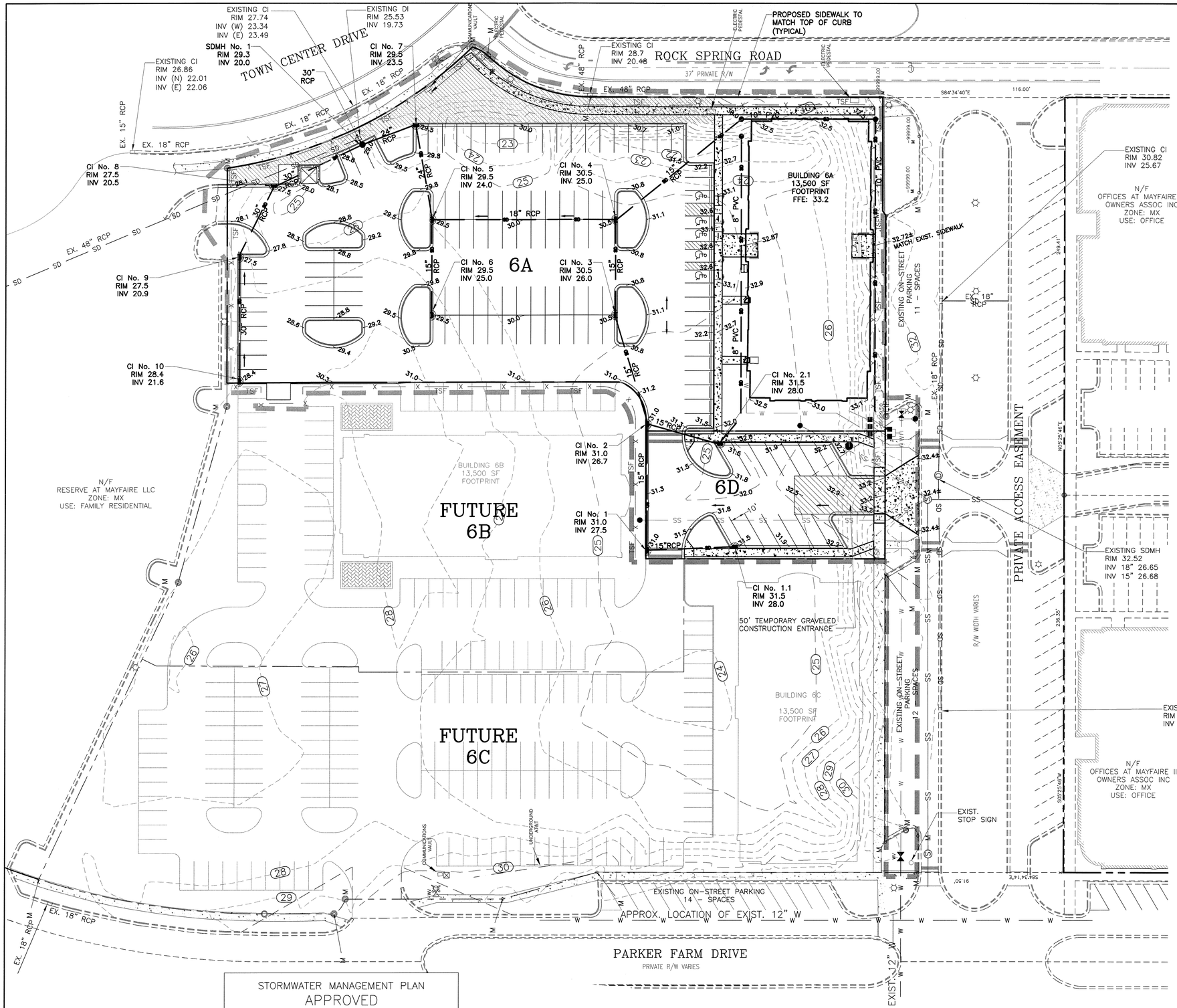

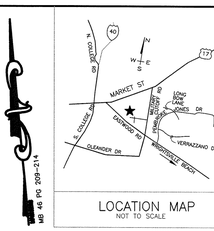

NOTES:

ZONING
1) TOPOGRAPHY COMPLETED BY PATRICK C. BRISTOW LAND SURVEYING, P.C.
2) PERMITTING OF BUSINESS IDENTIFICATION SIGNAGE IS A SEPARATE PROCESS. CITY OF WILMINGTON WILL NOT ALLOW OBSTRUCTIONS WITHIN THE RIGHT-OF-WAY.
3) CONTRACTOR SHALL FIELD VERIFY SIZE, MATERIAL, INVERTS AND LOCATION OF ALL EXISTING UTILITIES PRIOR TO INSTALLATION OF PROPOSED CONNECTIONS.
4) EXISTING EASEMENTS AS SHOWN
5) CONTRACTOR SHALL MAINTAIN ALL-WEATHER ACCESS FOR EMERGENCY VEHICLES AT ALL TIMES DURING CONSTRUCTION.
6) UNDERGROUND FIRE LINE(S) MUST BE PERMITTED AND INSPECTED BY THE WILMINGTON FIRE DEPARTMENT FROM THE PUBLIC RIGHT-OF-WAY TO THE BUILDING. CONTACT THE WILMINGTON FIRE DEPARTMENT DIVISION OF FIRE AND LIFE SAFETY AT 910-341-0698.
7) BUILDING IS TYPE IIB

SOLID WASTE
1) SITE TO USE DUMPSTER.

TRAFFIC
1) ALL PAVEMENT MARKINGS IN PUBLIC RIGHTS-OF-WAY AND FOR DRIVEWAYS ARE TO BE THERMOPLASTIC AND MEET CITY AND/OR NCDOT STANDARDS.
2) TRAFFIC CONTROL DEVICES (INCLUDING SIGNS AND PAVEMENT MARKINGS) IN AREAS OPEN TO PUBLIC TRAFFIC ARE TO MEET MUTCD (MANUAL ON UNIFORM TRAFFIC CONTROL DEVICES) STANDARDS.
3) CONTACT TRAFFIC ENGINEERING AT 910-341-7888 TO ENSURE THAT ALL TRAFFIC SIGNALS FACILITIES AND EQUIPMENT ARE SHOWN ON THE PLAN.
4) CALL TRAFFIC ENGINEERING AT 910-341-7888 FORTY-EIGHT HOURS PRIOR TO ANY EXCAVATION IN THE RIGHT-OF-WAY.
5) ANY BROKEN OR MISSING SIDEWALK PANELS, DRIVEWAY PANELS AND CURBING WILL BE REPLACED.
6) CONTACT 910-341-7888 TO DISCUSS STREET LIGHTING OPTIONS.
7) ALL TRAFFIC CONTROL SIGNS AND MARKINGS OFF THE RIGHT-OF-WAY ARE TO BE MAINTAINED BY THE PROPERTY OWNER IN ACCORDANCE WITH MUTCD STANDARDS.
8) NO ROWS TO BE CLOSED.
9) NO STREETS PROPOSED.
10) OFF SITE PARKING PROPOSED AS SHOWN.
11) DRIVEWAYS TO MEET CITY STANDARDS.
13) ALL PARKING STALL MARKINGS AND LANE ARROWS WITHIN THE PARKING AREAS SHALL BE WHITE.
14) STOP SIGNS AND STREET SIGNS TO REMAIN IN PLACE DURING CONSTRUCTION.
15) TACTILE WARNING MATS WILL BE INSTALLED ON ALL WHEELCHAIR RAMPS.

LANDSCAPING
1) A LANDSCAPING PLAN INDICATING THE LOCATION OF REQUIRED STREET TREES SHALL BE SUBMITTED TO THE CITY OF WILMINGTON TRAFFIC ENGINEERING DIVISION AND THE PARKS AND RECREATION DEPARTMENT FOR REVIEW AND APPROVAL PRIOR TO THE RECORDING OF THE FINAL PLAT.
2) NO OBSTRUCTIONS ARE PERMITTED IN THE SPACE BETWEEN THIRTY (30) INCHES AND TEN (10) FEET ABOVE THE GROUND WITHIN THE TRIANGULAR SITE DISTANCE.
3) PRIOR TO ANY CLEARING, GRADING OR CONSTRUCTION ACTIVITY, TREE PROTECTION FENCING WILL BE INSTALLED AROUND PROTECTED TREES OR GROVES OF TREES AND NO CONSTRUCTION WORKERS, TOOLS, MATERIALS, OR VEHICLES ARE PERMITTED WITHIN THE TREE PROTECTION FENCING.
4) ANY TREES AND/OR AREAS DESIGNATED TO BE PROTECTED MUST BE PROPERLY BARRICADED WITH FENCING AND PROTECTED THROUGHOUT CONSTRUCTION TO INSURE THAT NO CLEARING, GRADING OR STAGING OF MATERIALS WILL OCCUR IN THOSE AREAS.
5) NO EQUIPMENT IS ALLOWED ON SITE UNTIL ALL TREE PROTECTION FENCING AND SILT FENCING IS INSTALLED AND APPROVED. PROTECTIVE FENCING IS TO BE MAINTAINED THROUGHOUT THE DURATION OF THE PROJECT AND CONTRACTORS SHALL RECEIVE ADEQUATE INSTRUCTIONS ON TREE PROTECTION METHODS.
6) ALL PROPOSED VEGETATION WITHIN SIGHT TRIANGLES SHALL NOT INTERFERE WITH CLEAR VISUAL SIGHT LINES FROM 30"-10'.

CFPUA
1) WATER AND SEWER SERVICE SHALL MEET CAPE FEAR PUBLIC UTILITY AUTHORITY (CFPUA) DETAILS AND SPECIFICATIONS.
2) PROJECT SHALL COMPLY WITH THE CFPUA CROSS CONNECTION CONTROL REQUIREMENTS. WATER METER(S) CANNOT BE RELEASED UNTIL ALL REQUIREMENTS ARE MET AND THE STATE HAS GIVEN THEIR FINAL APPROVAL.
3) IF THE CONTRACTOR DESIRES CFPUA WATER FOR CONSTRUCTION, HE SHALL APPLY IN ADVANCE FOR THIS SERVICE AND MUST PROVIDE A REDUCED PRESSURE ZONE (RPZ) BACKFLOW PREVENTION DEVICE ON THE DEVELOPERS SIDE OF THE WATER METER BOX.
4) ANY IRRIGATION SYSTEM SUPPLIED BY CFPUA WATER SHALL COMPLY WITH THE CFPUA'S CONNECTION CONTROL REGULATION. CALL 910-332-6419 FOR INFORMATION.
5) ANY BACKFLOW PREVENTION DEVICES REQUIRED BY CFPUA WILL NEED TO BE ON THE LIST OF APPROVED DEVICES FOR USCFCCCHR OR ASSE.
6) PUBLIC WATER MAIN EXTENSION AND WATER SERVICES PROPOSED. SANITARY SEWER SERVICE PROPOSED.
7) CONTACT THE NORTH CAROLINA ONE CALL CENTER AT 1-800-632-4949 PRIOR TO DOING ANY DIGGING, CLEARING OR GRADING.
8) ANY IRRIGATION SYSTEM SHALL BE EQUIPPED WITH A RAIN AND FREEZER SENSOR.
9) CONTRACTOR TO FIELD VERIFY EXISTING WATER AND SEWER SERVICE LOCATIONS, SIZES AND MATERIALS PRIOR TO CONSTRUCTION. ENGINEER TO BE NOTIFIED OF ANY CONFLICTS.
10) A UTILITY CUT PERMIT IS REQUIRED FOR EACH OPEN CUT OF A CITY STREET. CONTACT 910-341-5888 FOR MORE DETAILS.

DRAINAGE
1) SHEET FLOW TO PROPOSED DROP INLETS TO EXISTING STORM DRAIN SYSTEM THEN TO OFFSITE STORM WATER POND 6.

UNDERGROUND UTILITIES
1) ALL ELECTRIC, CABLE TELEVISION AND TELEPHONE FACILITIES, FIRE ALARM CONDUITS, STREET LIGHTING WIRING AND OTHER WIRING CONDUITS AND SIMILAR FACILITIES SHALL BE PLACED UNDERGROUND BY THE DEVELOPER OR THE APPROPRIATE UTILITY COMPANY.
2) A MINIMUM COVER OF 30-INCHES OVER ALL PROPOSED WATER LINES SHALL BE PROVIDED.

SITE DATA:

PROPERTY OWNER	THE OFFICES AT MAYFAIRE IV, LLC
PROJECT ADDRESS	6740 ROCK SPRING ROAD
PIN NUMBER	R05000-003-104-000
AREA NOT IN A FEMA 100-YEAR FLOOD ZONE.	
ZONING DISTRICT	MX
DISTURBED AREA	2.35 AC
SETBACKS REQUIRED	TO BE DETERMINED BY MAYFAIRE
PROPOSED BUILDING SETBACKS	FRONT: 32' REAR: 319' SIDE: 17'/285'
TRACT AREA (6A)	76,791 SF (1.76 AC)
TRACT AREA (6D)	12,015 SF (0.27 AC)
TRACT AREA (6A+6D)	88,806 SF (2.04 AC)
BUILDING USE	OFFICE
BUILDING TYPE	IIB
EXISTING BUILDING AREA	0 SF
PROPOSED BUILDING AREA (GROSS)	40,500 SF
BUILDING LOT COVERAGE (13,500/76,791)	17.6%
NUMBER OF BUILDINGS	1
NUMBER OF UNITS	1
BUILDING HEIGHT	50'
NUMBER OF STORIES	3
SF PER FLOOR (GROSS)	
1ST FLOOR	13,500 SF
2ND FLOOR	13,500 SF
3RD FLOOR	13,500 SF
EXISTING IMPERVIOUS AREAS: (6A)	
EXISTING PAVEMENT	0 SF
EXISTING SIDEWALK	1,330 SF
EXISTING IMPERVIOUS AREA	1,330 SF (1.7%)
EXISTING IMPERVIOUS AREAS: (6D)	
EXISTING PAVEMENT	0 SF
EXISTING SIDEWALK	565 SF
EXISTING IMPERVIOUS AREA	565 SF (4.4%)
PROPOSED IMPERVIOUS AREAS: (6A)	
PROPOSED BUILDING FOOTPRINT	13,500 SF
PROPOSED PAVEMENT	43,618 SF
PROPOSED SIDEWALK	2,704 SF
EXISTING IMPERVIOUS TO REMAIN	1,330 SF
FUTURE	7,087 SF
TOTAL 6A IMPERVIOUS	68,239 SF
PROPOSED IMPERVIOUS AREAS: (6D)	
PROPOSED BUILDING FOOTPRINT	0 SF
PROPOSED PAVEMENT	8,580 SF
PROPOSED SIDEWALK	1,480 SF
EXISTING IMPERVIOUS TO REMAIN	319 SF
FUTURE	299 SF
TOTAL 6D IMPERVIOUS	10,678 SF
TOTAL 6A+6D IMPERVIOUS AREA	78,917 SF (88.9%)
TOTAL PROPOSED OFFSITE IMPERVIOUS	1,085 SF
PARKING REQUIRED:	TO BE DETERMINED BY MAYFAIRE
MINIMUM: 1/300 (40,500/300)	NO MINIMUM REQUIRED
MAXIMUM: 1/200 (40,500/200)	203 SPACES
PARKING PROVIDED:	126 SPACES
CAMA LAND USE:	WATERSHED RESOURCE PROTECTION
PUBLIC WATER AND SEWER BY CFPUA	
EXISTING WATER FLOW:	0 GPD
EXISTING SEWER FLOW:	0 GPD
PROPOSED WATER FLOW: (120 GPD/1,000 SF x 40,500 x 110%)	5,346 GPD
PROPOSED SEWER FLOW: (120 GPD/1000 SF x 40,500 SF)	4,860 GPD
HANDICAP SPOTS REQUIRED (1-25 SPOTS= 1 HANDICAP SPOT) 124 SPOTS/25=4.96	PROPOSED 5 HANDICAP SPOTS
OPEN SPACE	5,752 SF
BICYCLE PARKING REQUIRED (124 SPACES)	10 BICYCLE PARKS
BICYCLE PARKING PROPOSED	10 BICYCLE PARKS

LEGEND

- PROPERTY LINE (BOUNDARY)
- LIMITS OF DISTURBANCE
- TSF x TSF — TEMPORARY SILT FENCE
- PROPOSED RUN-OFF ARROWS
- EXIST. CONCRETE AREA
- PROPOSED CONCRETE AREA
- OPEN SPACE
- 33.0 — PROPOSED SPOT ELEVATION

SITE PLAN

BAR SCALE 1"=30'

30' 15' 0' 30' 60' 90'

Approved Construction Plan

	Name	Date
Planning		
Traffic		
Fire		

STORMWATER MANAGEMENT PLAN
APPROVED
CITY OF WILMINGTON
ENGINEERING DEPARTMENT
DATE _____ PERMIT # _____
SIGNED_____

For each open utility cut of City streets, a $325 permit shall be required from the City prior to occupancy and/or project acceptance.

REVISIONS

No./ Date	Description	By
R1 07.13.16	SHEETED, NORTH SIDEWALK	EJW
R2 08.01.16	CITY SW COMMENTS	MLV
R3 08.08.16	CITY TRAFFIC COMMENTS	EJW
R4 08.11.16	CITY TRAFFIC COMMENTS	EJW

GRADING, DRAINAGE, EROSION CONTROL AND STORMWATER MANAGEMENT

MAYFAIRE OFFICE IV

6740 ROCK SPRING ROAD
WILMINGTON, NORTH CAROLINA

TRIPP ENGINEERING, P.C.
419 Chestnut Street
Wilmington, North Carolina 28401
Phone 910-763-5100
Fax 910-763-5631
NC LICENSE No: C-1497

© 2016 TRIPP ENGINEERING, P.C.

7.18.16

NORTH CAROLINA PROFESSIONAL SEAL 17374 ENGINEER PHILLIP GREGORY TRIPP

DATE 07-08-16
DESIGN PGT
DRAWN EJW

C3

SHEET 3 OF 4

16001

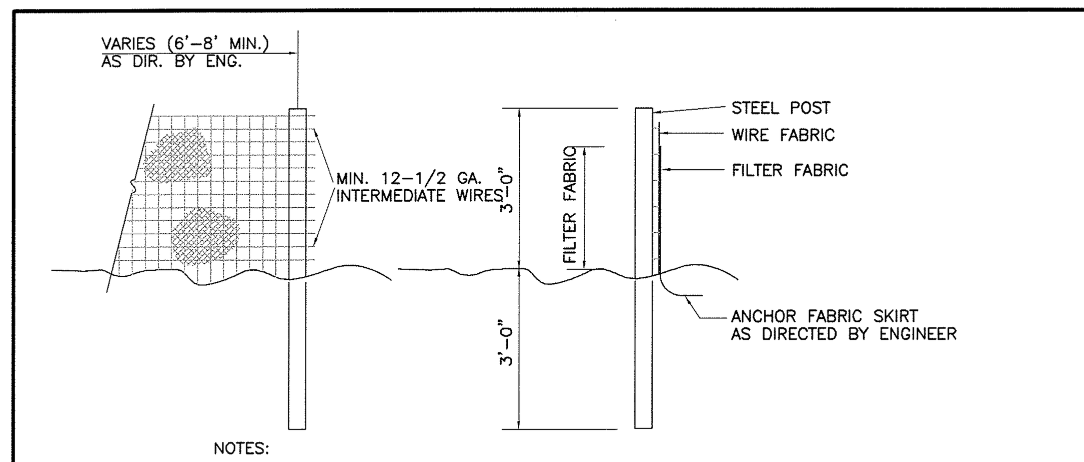

NOTES:
1. FENCE FABRIC SHALL BE A MIN. OF 32" IN WIDTH AND SHALL HAVE A MIN. OF SIX LINE WIRES WITH 12" STAY SPACING.
2. FABRIC SHALL BE FOR EROSION CONTROL AND MIN. OF 36" IN WIDTH. FABRIC SHALL BE FASTENED ADEQUATELY TO THE WIRE FABRIC AS DIRECTED BY THE ENGINEER.
3. STEEL POST SHALL BE 5'-0" IN HEIGHT AND BE OF THE SELF-FASTENER STEEL ANGLE TYPE.

TEMPORARY SILT FENCE
NTS

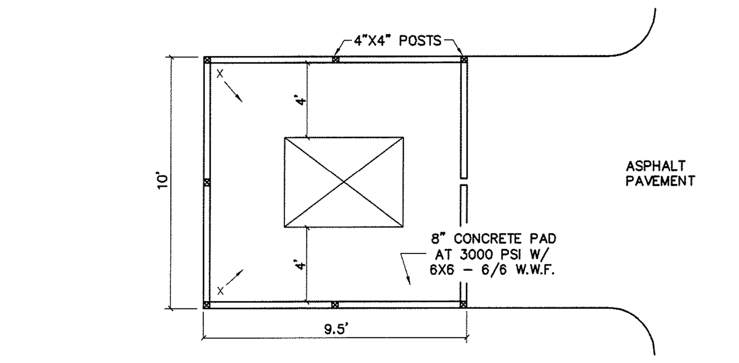

PLAN

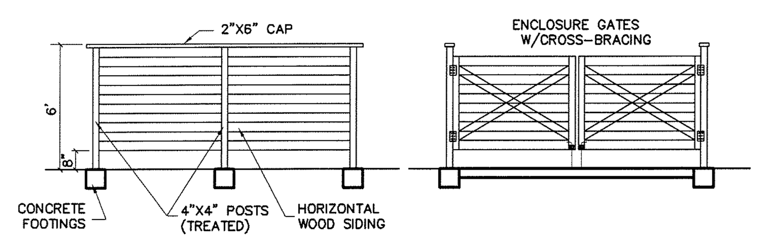

ELEVATIONS

DUMPSTER PAD & ENCLOSURE DETAIL
NTS

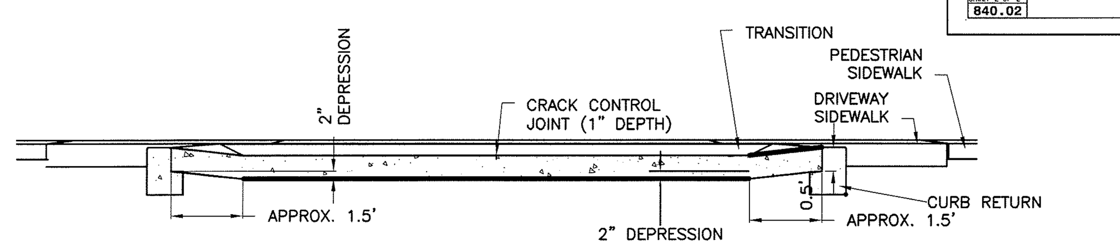

SECTION B-B

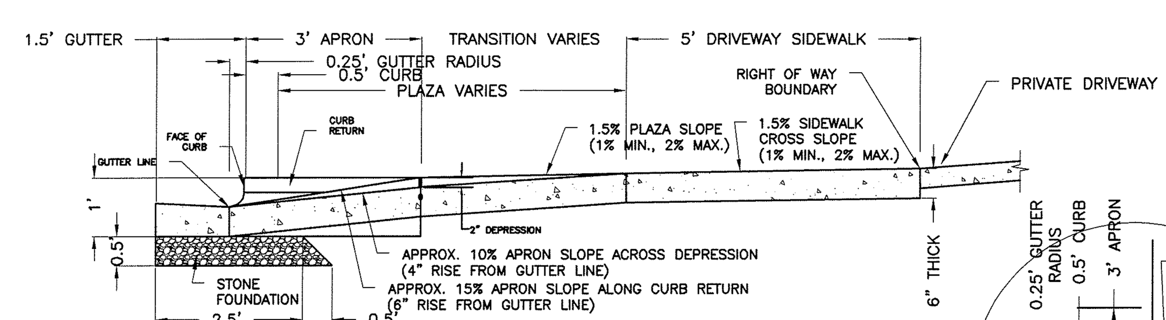

SECTION A-A

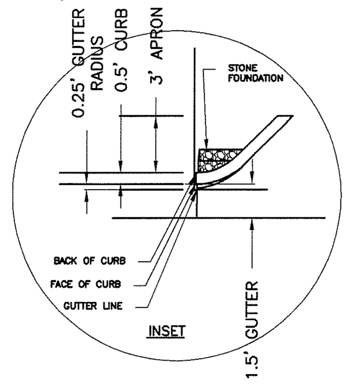

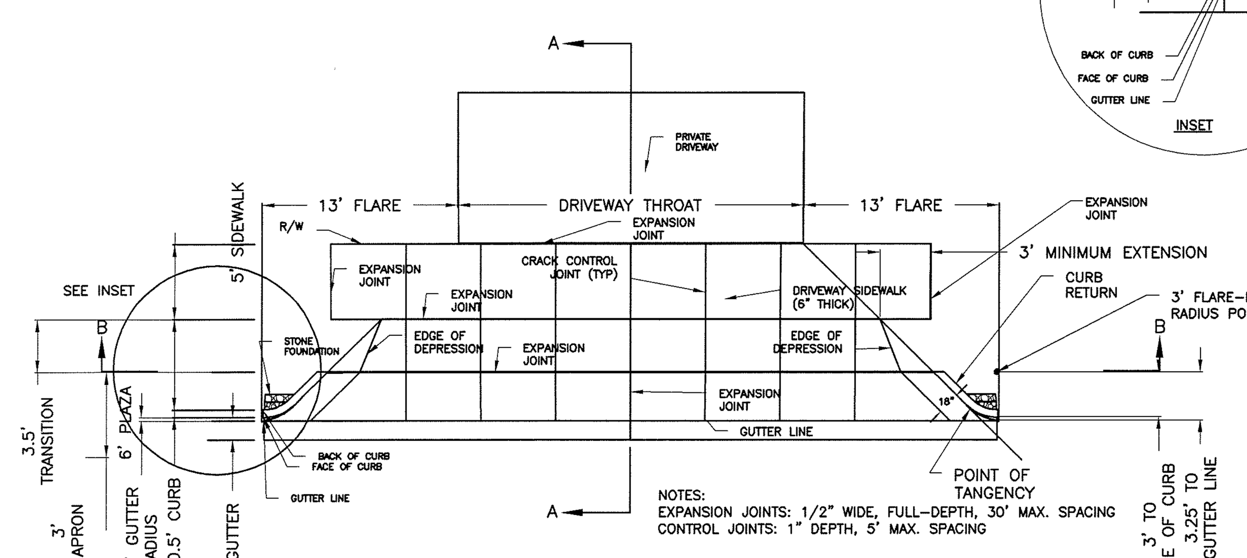

NOTES:
EXPANSION JOINTS: 1/2" WIDE, FULL-DEPTH, 30' MAX. SPACING
CONTROL JOINTS: 1" DEPTH, 5' MAX. SPACING

CITY OF WILMINGTON COMMERCIAL DRIVEWAY SD 3-03
NTS

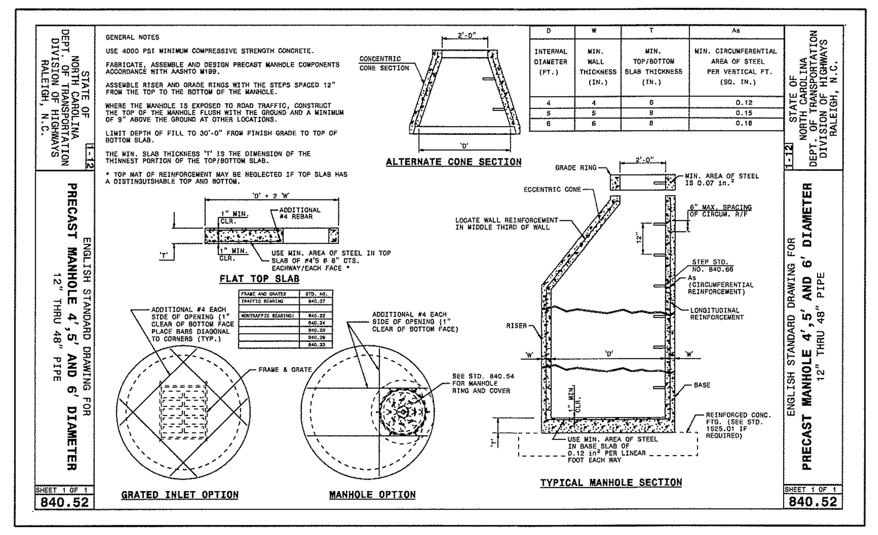

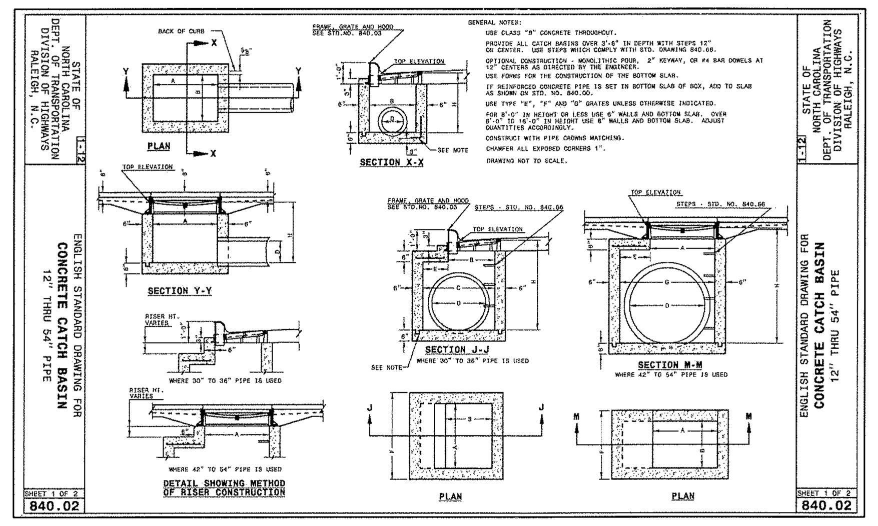

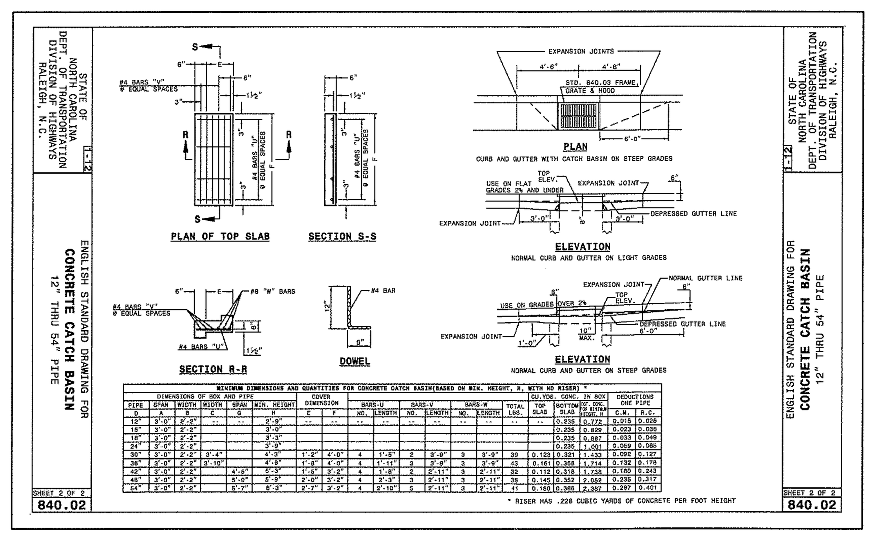

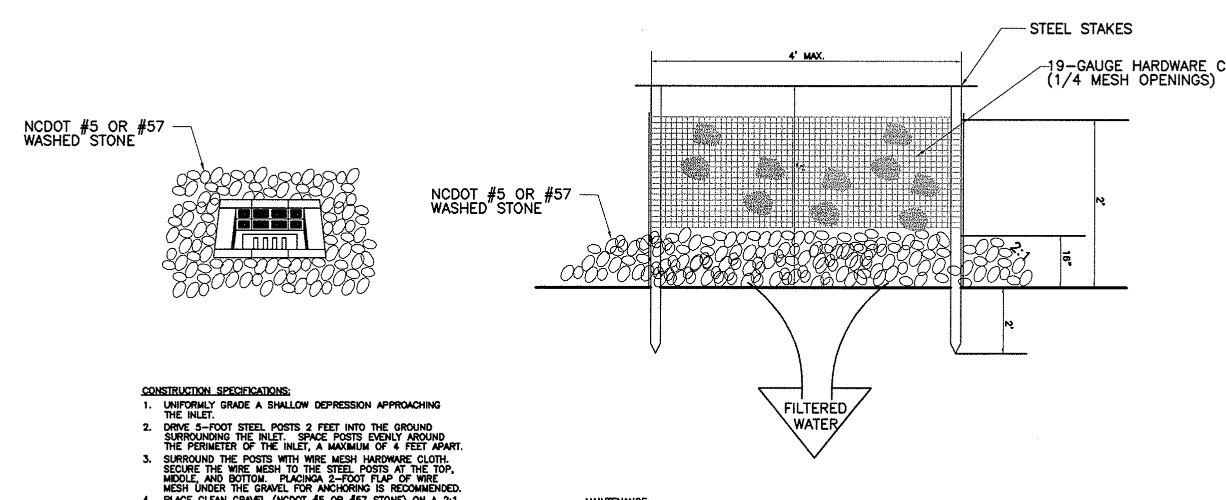

HARDWARE CLOTH AND GRAVEL INLET PROTECTION

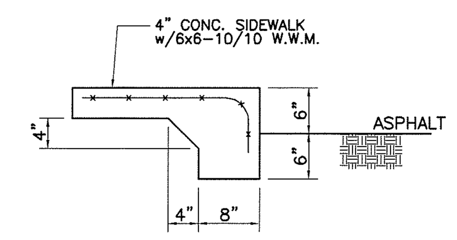

TURN DOWN SIDEWALK
NTS

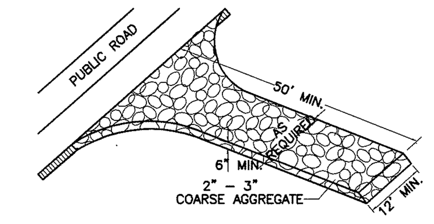

TEMPORARY GRAVELED CONSTRUCTION ENTRANCE
NTS

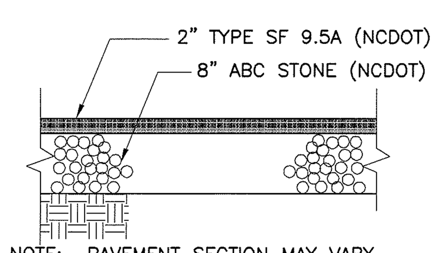

NOTE: PAVEMENT SECTION MAY VARY DEPENDING UPON FIELD CONDITIONS. CONTRACTOR SHALL COORDINATE W/OWNER & GEOTECHNICAL ENGINEER TO DETERMINE ACTUAL PAVEMENT SECTION.

CITY OF WILMINGTON PAVEMENT SECTION
NTS

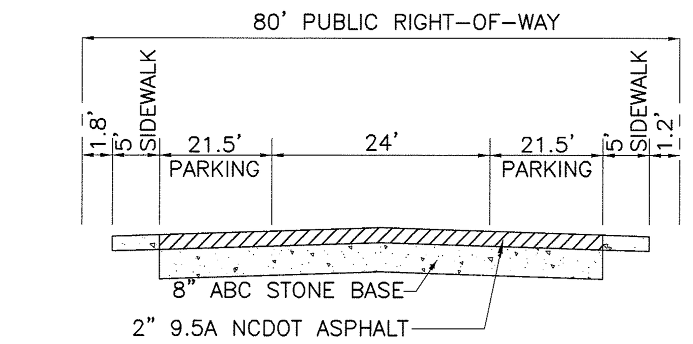

ROAD CROSS-SECTION 80' PUBLIC R/W
NTS

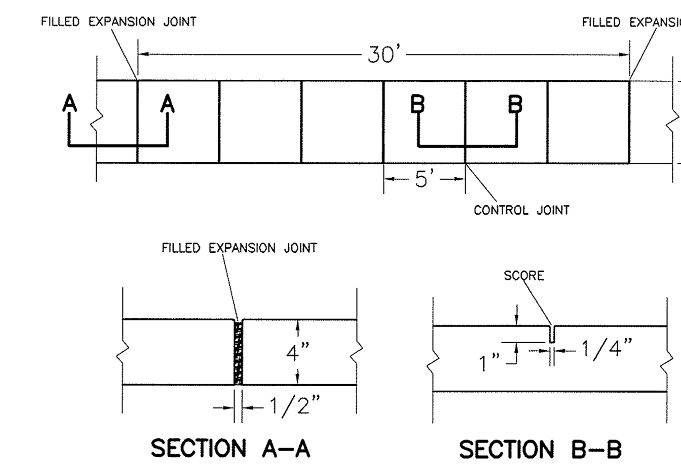

NOTES:
1. JOINT MATERIAL TO COMPLY WITH CURRENT NCDOT STANDARDS.
2. SANITARY SEWER CLEAN-OUTS, WATER METERS, MANHOLES, AND VALVE LIDS TO BE LOCATED OUTSIDE SIDEWALK WHERE FEASIBLE.
3. MINIMUM SIDEWALK WIDTH TO BE 6' MINIMUM IF PLACED AT BACK OF CURB.
4. CONCRETE FOR ALL SIDEWALKS (EXCEPT ANY PORTION CONTAIN WITHIN A DRIVEWAY APRON) SHALL BE CLASS "A" - 3,000 PSI.
5. MINIMUM REPLACEMENT FOR REPAIRS IS A 5' X 5' PANEL
6. 4" STONE BASE MAY BE REQUIRED FOR POOR SOIL CONDITIONS
7. MINIMUM DEPTH FOR TUNNELING BELOW SIDEWALK IS 12"
8. MAX ADJACENT GROUND SLOPE WITHOUT RAILING IS 2:1
9. MIN GRADE FOR PROPER DRAINAGE IS 1% IN AT LEAST 1 DIRECTION. MAX CROSS SLOPE IS 2%. MAX LONGITUDINAL SLOPE IS 8.3%, 10% IF LIMITED BY EXISTING CONDITIONS, OR NO GREATER THAN THE SLOPE OF THE EXISTING ADJACENT ROAD.

CITY OF WILMINGTON SIDEWALK SD 3-10
NTS

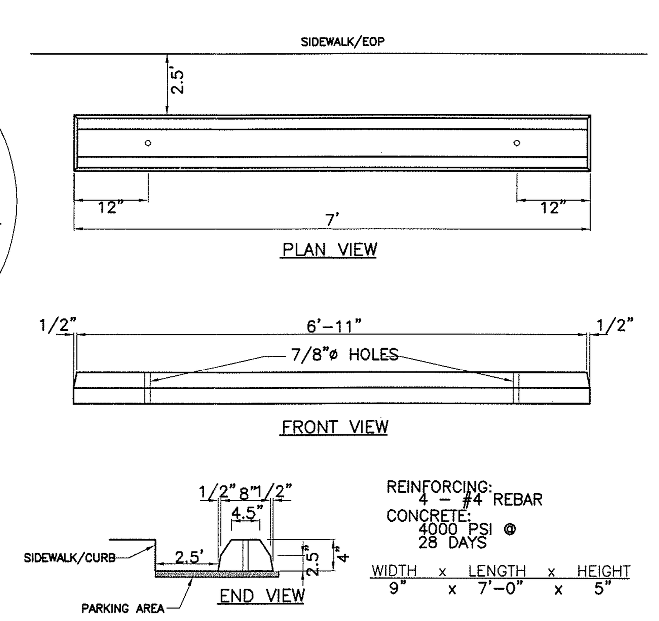

WHEEL STOP DETAIL
NTS

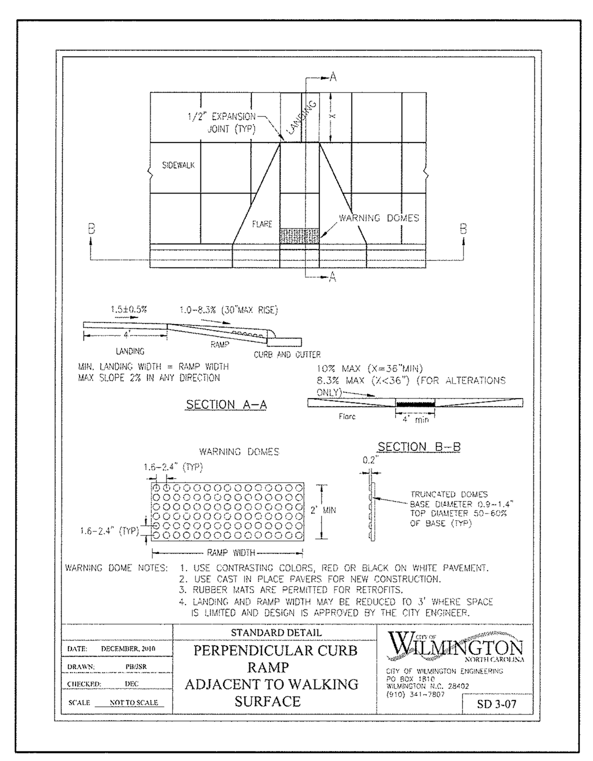

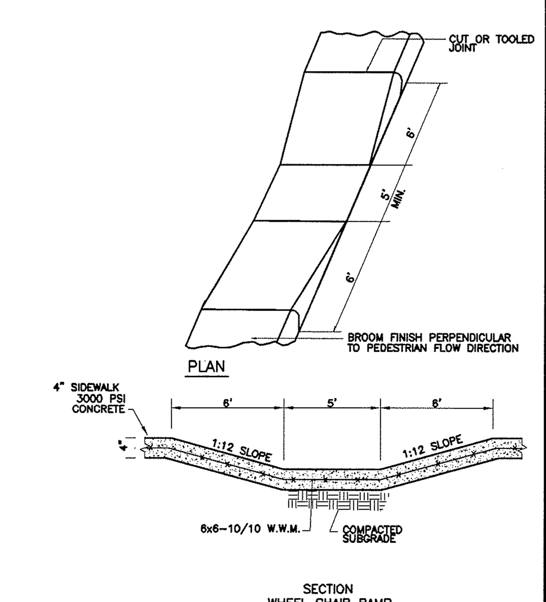

TYPICAL SIDEWALK AND WHEEL CHAIR RAMP DETAIL

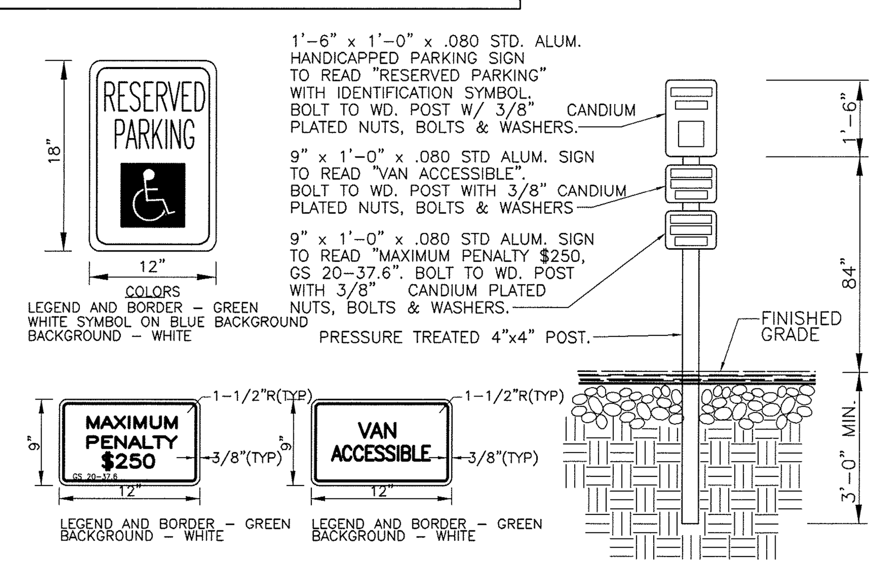

TYPICAL HANDICAPPED SIGN DETAIL
NTS

Approved Construction Plan		
	Name	Date
Planning		
Traffic		
Fire		

STORMWATER MANAGEMENT PLAN
APPROVED
CITY OF WILMINGTON
ENGINEERING DEPARTMENT
DATE ________ PERMIT # ________
SIGNED________________________

For each open utility cut of City streets, a $325 permit shall be required from the City prior to occupancy and/or project acceptance.

SITE AREA DESCRIPTION	STABILIZATION TIMEFRAME	STABILIZATION TIMEFRAME EXCEPTIONS
PERIMETER DIKES, SWALES, DITCHES AND SLOPES	7 DAYS	NONE
HIGH QUALITY WATER (HQW) ZONES	7 DAYS	NONE
SLOPES STEEPER THAN 3:1	7 DAYS	IF SLOPES ARE 10' OR LESS IN LENGTH AND ARE NOT STEEPER THAN 2:1, 14 DAYS ARE ALLOWED.
SLOPES 3:1 OR FLATTER	14 DAYS	7 DAYS FOR SLOPES GREATER THAN 50 FEET IN LENGTH
ALL OTHER AREAS WITH SLOPES FLATTER THAN 4:1	14 DAYS	NONE (EXCEPT FOR PERIMETERS AND HQW ZONES)

NPDES GROUND STABILIZATION CRITERIA
NTS

SPRING-SUMMER PERMANENT GRASSING DETAIL

SEEDING MIXTURE

SPECIES	RATE (lb/acre)
PENSACOLA BAHIAGRASS	50
SERICEA LESPEDEZA	30
COMMON BERMUDA GRASS	10
GERMAN MILLET	10
TALL FESCUE	50

SEEDING NOTES
1. WHERE A NEAT APPEARANCE IS DESIRED, OMIT SERICEA.
2. USE COMMON BERMUDA GRASS ONLY ON ISOLATED SITES WHERE IT CANNOT BECOME A PEST. BERMUDA GRASS MAY BE REPLACED WITH 5 lb/acre CENTIPEDE GRASS.

SEEDING DATES
APRIL 1 - JULY 15

SOIL AMENDMENTS
APPLY LIME AND FERTILIZER ACCORDING TO SOIL TESTS, OR APPLY 3,000 lb/acre GROUND AGRICULTURE LIMESTONE AND 500 lb/acre 10-10-10 FERTILIZER.

MULCH
APPLY 4,000 lb/acre GRAIN STRAWOR EQUIVALENT COVER OF ANOTHER SUITABLE MULCH. ANCHOR BY TACKING WITH ASPHALT, ROVING, OR NETTING OR BY CRIMPING WITH A MULCH ANCHORING TOOL. A DISK WITH BLADES SET NEARLY STRAIGHT CAN BE USED AS A MULCH ANCHORING TOOL.

MAINTENANCE
REFERTILIZE THE FOLLOWING APRIL WITH 50 lb/acre NITROGEN. REPEAT AS GROWTH REQUIRES. MAY BE MOWED ONLY ONCE A YEAR. WHERE A NEAT APPEARANCE IS DESIRED, OMIT SERICEA AND MOW AS OFTEN AS NEEDED.

FALL-WINTER PERMANENT GRASSING DETAIL

SEEDING MIXTURE

SPECIES	RATE (lb/acre)
TALL FESCUE (BLEND OF TWO OR THREE IMPROVED VARIETIES)	200
RYE (GRAIN)	25

SEEDING DATES
JANUARY - APRIL
AUGUST - DECEMBER

SOIL AMENDMENTS
APPLY LIME AND FERTILIZER ACCORDING TO SOIL TESTS, OR APPLY 3.000-5,000 lb/acre GROUND AGRICULTURAL LIMESTONE (USE THE LOWER RATE ON SANDY SOILS) AND 1,000 lb/acre 10-10-10 FERTILIZER.

MULCH
APPLY 4,000 lb/acre GRAIN STRAW OR EQUIVALENT COVER OF ANOTHER SUITABLE MULCH. ANCHOR STRAW BY TACKING WITH ASPHALT, ROVING, OR NETTING OR BY CRIMPING WITH A MULCH ANCHORING TOOL. A DISK WITH BLADES SET NEARLY STRAIGHT CAN BE USED AS A MULCH ANCHORING TOOL.

MAINTENANCE
FERTILIZE ACCORDING TO SOIL TESTS OR APPLY 40 lb/acre NITROGEN IN JANUARY OR FEBRUARY, 40 lb IN SEPTEMBER AND 40 lb IN NOVEMBER, FROM A 12-4-8, 16-4-8, OR SIMILAR TURF FERTILIZER. AVOID FERTILIZER APPLICATIONS DURING WARM WEATHER, AS THIS INCREASES STAND LOSSES TO DISEASE. RESEED, FERTILIZE, AND MULCH DAMAGED AREAS IMMEDIATELY. MOW TO A HEIGHT OF 2.5-3.5 INCHES AS NEEDED.

LATE WINTER & EARLY SPRING TEMPORARY GRASSING DETAIL

SEEDING MIXTURE

SPECIES	RATE (lb/acre)
Rye (grain)	120
Annual lespedeza (Kobe in Piedmont and Coastal Plain, Korean in Mountains)	50

Omit annual lespedeza when duration of temporary cover is not to extend beyond June.

SEEDING DATES:
Mountains - Above 2500 ft: Feb. 15-May 15
Below 2500 ft: Feb. 1-May 1
Piedmont - Jan. 1-May 1
Coastal Plain - Dec. 1-Apr. 15

SOIL AMENDMENTS
Follow recommendations of soil tests or apply 2,000 lb/acre ground agricultural limestone and 750 lb/acre 10-10-10 fertilizer.

MULCH
APPLY 4,000 LB/ACRE STRAW. ANCHOR STRAW BY TACKING WITH ASPHALT, NETTING, OR A MULCH ANCHORING TOOL. A DISK WITH BLADES SET NEARLY STRAIGHT CAN BE USED AS A MULCH ANCHORING TOOL.

MAINTENANCE
Refertilize if growth is not fully adequate. Reseed, refertilize and mulch immediately following erosion or other damage.

TEMPORARY SUMMER GRASSING DETAIL

SEEDING MIXTURE

SPECIES	RATE (lb/acre)
GERMAN MILLET	40

IN THE PIEDMONT AND MOUNTAINS, A SMALL-STEMMED SUNDANGRASS MAY BE SUBSTITUTED AT A RATE OF 50 LB/ACRE.

SEEDING NOTES
MOUNTAINS - MAY 15-AUG. 15
PIEDMONT - MAY 1-AUG. 15
COASTAL PLAN - APR. 15-AUG. 15

SOIL AMENDMENTS
FOLLOW RECOMMENDATIONS OF SOIL TESTS OR APPLY 2,000 LB/ACRE GROUND AGRICULTURAL LIMESTONE AND 750 LB/ACRE 10-10-10 FERTILIZER.

MULCH
APPLY 4,000 LB/ACRE STRAW. ANCHOR STRAW BY TACKING WITH ASPHALT, NETTING, OR A MULCH ANCHORING TOOL. A DISK WITH BLADES SET NEARLY STRAIGHT CAN BE USED AS A MULCH ANCHORING TOOL.

MAINTENANCE
REFERTILIZE IF GROWTH IS NOT FULLY ADEQUATE. RESEED, REFERTILIZE AND MULCH IMMEDIATELY FOLLOWING EROSION OR OTHER DAMAGE.

TEMPORARY FALL GRASSING DETAIL

SEEDING MIXTURE

SPECIES	RATE (lb/acre)
Rye (grain)	120

SEEDING NOTES
MOUNTAINS - AUG. 15-DEC. 15
COASTAL PLAN and PIEDMONT - AUG. 15-DEC 30

SOIL AMENDMENTS
FOLLOW SOIL TESTS OR APPLY 2,000 LB/ACRE GROUND AGRICULTURAL LIMESTONE AND 1,000 LB/ACRE 10-10-10 FERTILIZER.

MULCH
APPLY 4,000 LB/ACRE STRAW. ANCHOR STRAW BY TACKING WITH ASPHALT, NETTING, OR A MULCH ANCHORING TOOL. A DISK WITH BLADES SET NEARLY STRAIGHT CAN BE USED AS A MULCH ANCHORING TOOL.

MAINTENANCE
Repair and refertilize damaged areas immediately. Topdress with 50 lb/acre of nitrogen in March. If it is necessary to extend temporary cover beyond June 15, overseed with 50 lb/acre Kobe (Piedmont and Coastal Plain) or Korean (Mountains) lespedeza in late February or early March.

SITE WORK NOTES
1. THE CONTRACTOR SHALL VISIT THE SITE AND BECOME FAMILIARIZED WITH EXISTING CONDITIONS BOTH ON AND IMMEDIATELY ADJACENT TO THE SITE.
2. CLEARING: CONTRACTOR SHALL REMOVE ALL TREES AND VEGETATION WITHIN LIMITS OF CONSTRUCTION UNLESS OTHERWISE DESIGNATED TO REMAIN.
3. GRUBBING AND STRIPPING: CONTRACTOR SHALL RAKE AND REMOVE ROOTS, STUMPS, VEGETATION, DEBRIS, EXISTING STRUCTURES ABOVE AND BELOW GRADE, ORGANIC MATERIAL OR ANY OTHER UNSUITABLE MATERIAL WITHIN LIMITS OF CONSTRUCTION.
4. MUCKING: CONTRACTOR SHALL COORDINATE WITH OWNER AND THEIR GEOTECHNICAL REPRESENTATIVE TO COORDINATE REMOVAL OF ANY SOFT AREAS.
5. DISPOSAL: CLEARED, GRUBBED, STRIPPED OR OTHER WASTE MATERIAL SHALL BE REMOVED FROM SITE AND DISPOSED OF IN A PROPERLY PERMITTED FACILITY.
6. FILL AND COMPACTION SHOULD COMPLY WITH GEOTECHNICAL REPORT.
7. THE CONTRACTOR SHALL NOTE THAT THE GRADING PLAN MAY NOT REPRESENT A BALANCED EARTHWORK CONDITION. THE CONTRACTOR SHALL BE RESPONSIBLE FOR CUT AND FILL QUANTITIES AND COMPLETE INSTALLATION TO SPECIFIED GRADES.
8. THE CONTRACTOR SHALL FURNISH SUITABLE BORROW MATERIAL FROM AN OFF-SITE PROPERLY PERMITTED FACILITY AS REQUIRED.
9. THE CONTRACTOR IS RESPONSIBLE FOR THE LOCATION AND PROTECTION OF ALL EXISTING UTILITIES DURING CONSTRUCTION. BEFORE COMMENCING ANY EXCAVATIONS IN OR ALONG ROADWAYS OR RIGHT-OF-WAYS, PUBLIC AREAS OR IN PRIVATE EASEMENTS, THE CONTRACTOR SHALL NOTIFY ALL APPROPRIATE PERSONNEL OF THEIR INTENT TO EXCAVATE, IN WRITING, NOT LESS THAN 10 DAYS PRIOR TO EXCAVATING.
10. THE CONTRACTOR SHALL BE RESPONSIBLE TO COORDINATE DISCONNECTION/ RECONNECTION AND/OR THE RELOCATION OF ALL EXISTING UTILITIES WITH APPROPRIATE PERSONNEL.
11. EXISTING SURVEYING PERFORMED BY PATRICK BRISTOW LAND SURVEYING, PC AND SUPPLIED BY THE OWNER.
12. THE CONTRACTOR SHALL FIELD VERIFY ALL DIMENSIONS AT THE SITE. FURTHERMORE THE CONTRACTOR SHALL REPORT ALL DISCREPANCIES OR QUESTIONS TO THE ENGINEER PRIOR TO INSTALLATION.
13. THE CONTRACTOR SHALL PROVIDE ANY AND ALL LAYOUT REQUIRED TO CONSTRUCT HIS WORK UNLESS OTHERWISE DIRECTED BY OWNER.
14. ALL PVC UTILITY MAINS SHALL BE INSTALLED WITH A MINIMUM OF 36" COVER AT FINAL GRADE.
15. ALL SERVICE CONNECTIONS SHALL BE INSTALLED TO MEET ALL LOCAL AND STATE CODES. METERS, TAPS, MATERIALS, WORKMANSHIP AND ALL FEES SHALL BE THE RESPONSIBILITY OF THE CONTRACTOR AND SHALL COMPLY WITH ALL REQUIREMENTS.
16. ALL PAVEMENT, BASE AND SUBGRADE SHALL CONFORM TO NCDOT STANDARDS INCLUDING WORKMANSHIP, MATERIALS AND EQUIPMENT. APPROPRIATE BARRICADES, SIGNS, LIGHTS OR OTHER TRAFFIC CONTROL DEVICES SHALL BE PROVIDED IN ACCORDANCE WITH NCDOT TO MAINTAIN SAFETY AND TWO WAY TRAFFIC.
17. ALL AREAS SHALL BE GRADED FOR POSITIVE DRAINAGE. THE CONTRACTOR SHALL REPORT ANY DISCREPANCIES TO THE ENGINEER PRIOR TO INSTALLATION. ALL AREAS SHALL BE SLOPED TO DRAIN AWAY FROM BUILDINGS AT ALL TIMES.
18. CONCRETE STORM DRAINAGE PIPE SHALL BE CLASS III WITH RUBBER GASKETED JOINTS AND INSTALLED IN ACCORDANCE WITH MANUFACTURER'S REQUIREMENTS.
19. USE WHITE LANE MARKING PAINT FOR ALL PAVEMENT MARKINGS. PAINT SHALL BE A CHLORINATED RUBBER ALKYD, FS TT-P-115, TYPE III, FACTORY MIXED, QUICK DRYING, NON BLEEDING. REFLECTIVE MATERIAL MAY BE ADDED AT OWNER'S OPTION FOR NIGHT REFLECTING.
20. DUCTILE IRON SHALL BE CLASS 50.
21. CONCRETE FOR WALKS, CURBS AND DRIVES SHALL HAVE A MINIMUM COMPRESSIVE STRENGTH OF 3000 PSI @ 28 DAYS - AIR ENTRAINED.
22. FIELD TESTING SHALL BE DONE BY AN INDEPENDENT TESTING LABORATORY PAID FOR BY THE OWNER. FURTHER TESTING REQUIRED DUE TO A FAILED TEST WILL BE PAID FOR BY THE CONTRACTOR.
23. SEE GEOTECHNICAL REPORT NO. __________, DATED ________, BY __________ ______ FOR ADDITIONAL REQUIREMENTS.

CONSTRUCTION SEQUENCE
1. NO CUT SLOPE OR FILL SLOPE SHALL EXCEED A RISE OR FALL OF ONE FOOT FOR EVERY RUN OF 3 FEET (1 VERTICAL TO 3 HORIZONTAL).
2. NO SEDIMENT WILL BE ALLOWED TO EXIT THE SITE. ALL EROSION SHALL BE CONTROLLED INCLUDING SIDE SLOPES DURING AND AFTER CONSTRUCTION.
3. INSTALL PRIMARY EROSION CONTROL MEASURES BEFORE BEGINNING CONSTRUCTION INCLUDING BUT NOT LIMITED TO GRAVELED CONSTRUCTION ENTRANCE, SILT FENCE, CHECK DAMS, ETC. INSTALL ALL SECONDARY EROSION CONTROL MEASURES AS SOON AS POSSIBLE AFTER BEGINNING CONSTRUCTION.
4. ALL EROSION CONTROL MEASURES TO BE INSPECTED AFTER EACH RAIN. SILT FENCE AND INLET PROTECTION ARE TO BE CLEANED WHEN 0.5 FEET OF SEDIMENT HAVE ACCUMULATED IN FRONT OF THE DEVICE OR WHEN THEY LEAK OR FAIL. SEDIMENT TRAPS ARE CLEANED OUT AS STATED OR WHEN HALF FULL.
5. IF APPLICABLE, CONSTRUCT PROPOSED RETENTION POND TO ACT AS A SEDIMENT BASIN DURING CONSTRUCTION. REMOVE ACCUMULATION OF SILT AS REQUIRED TO ALLOW PROPER FUNCTIONING. RESTORE POND TO DESIGN LEVELS AT THE COMPLETION OF CONSTRUCTION.
6. IF APPLICABLE, INSTALL DROP INLETS WITH INLET PROTECTION TO ACT AS SILT TRAPS DURING CONSTRUCTION. REMOVE ACCUMULATED SILT AS NEEDED TO PREVENT SILT FROM ENTERING STORM DRAIN PIPING.
7. A 4" LAYER OF TOPSOIL SHALL BE APPLIED TO ALL NEW AREAS TO BE GRASSED.
8. MAINTAIN ALL EROSION CONTROL MEASURES UNTIL PROJECT IS COMPLETE.
9. MORE STRINGENT MEASURES MAY BE REQUIRED TO HALT EROSION IF THOSE ON THIS PLAN PROVE TO BE LESS EFFECTIVE.
10. REMOVE ALL TEMPORARY EROSION CONTROL MEASURES UPON COMPLETION OF CONSTRUCTION. ALL PERMANENT MEASURES SHALL BE WELL ESTABLISHED PRIOR TO PROJECT COMPLETION.

MAINTENANCE PLAN
1. ALL EROSION AND SEDIMENT CONTROL PRACTICES WILL BE CHECKED FOR STABILITY AND OPERATION FOLLOWING EVERY RUNOFF-PRODUCING RAINFALL, BUT IN NO CASE, LESS THAN ONCE EVERY WEEK AND WITHIN 24 HOURS OF EVERY HALF INCH RAINFALL.
2. ALL POINTS OF EGRESS WILL HAVE CONSTRUCTION ENTRANCES THAT WILL BE PERIODICALLY TOP-DRESSED WITH AN ADDITIONAL 2 INCHES OF #4 STONE TO MAINTAIN PROPER DEPTH. THEY WILL BE MAINTAINED IN A CONDITION TO PREVENT MUD OR SEDIMENT FROM LEAVING THE SITE. IMMEDIATELY REMOVE OBJECTIONABLE MATERIAL SPILLED, WASHED OR TRACKED ONTO THE CONSTRUCTION ENTRANCE OR ROADWAYS.
3. SEDIMENT WILL BE REMOVED FROM HARDWARE CLOTH AND GRAVEL INLET PROTECTION, BLOCK AND GRAVEL INLET, ROCK DOUGHNUT INLET PROTECTION AND ROCK PIPE INLET PROTECTION WHEN THE DESIGNED STORAGE CAPACITY HAS BEEN HALF FILLED WITH SEDIMENT. ROCK WILL BE CLEANED OR REPLACED WHEN THE SEDIMENT POOL NO LONGER DRAINS AS DESIGNED. DEBRIS WILL BE REMOVED FROM THE ROCK AND HARDWARE CLOTH TO ALLOW PROPER DRAINAGE. SILT SACKS WILL BE EMPTIED ONCE A WEEK AND AFTER EVERY RAIN EVENT. SEDIMENT WILL BE REMOVED FROM AROUND BEAVER DAMS, DANDY SACKS AND SOCKS ONCE A WEEK AND AFTER EVERY RAIN EVENT.
4. DIVERSION DITCHES WILL BE CLEANED OUT IMMEDIATELY TO REMOVE SEDIMENT OR OBSTRUCTIONS FROM THE FLOW AREA. THE DIVERSION RIDGES WILL ALSO BE REPAIRED. SWALES MUST BE TEMPORARILY STABILIZED WITHIN 21 CALENDAR DAYS OF CEASE OF ANY PHASE OF ACTIVITY ASSOCIATED WITH A SWALE.
5. SEDIMENT WILL BE REMOVED FROM BEHIND THE SEDIMENT FENCE WHEN IT BECOMES HALF FILLED. THE SEDIMENT FENCE WILL BE REPAIRED AS NECESSARY TO MAINTAIN A BARRIER. STAKES MUST BE STEEL. STAKE SPACING WILL BE 6 FEET MAX. WITH THE USE OF EXTRA STRENGTH FABRIC, WITHOUT WIRE BACKING. STAKE SPACING WILL BE 8 FEET MAX. WHEN STANDARD STRENGTH FABRIC AND WIRE BACKING ARE USED. IF ROCK FILTERS ARE DESIGNED AT LOW POINTS IN THE IN THE SEDIMENT FENCE THE ROCK WILL BE REPAIRED OR REPLACED IF IT BECOMES HALF FULL OF SEDIMENT, NO LONGER DRAINS AS DESIGNED OR IS DAMAGED.
6. SEDIMENT WILL BE REMOVED FROM SEDIMENT TRAPS WHEN THE DESIGNED STORAGE CAPACITY HAS BEEN HALF FILLED WITH SEDIMENT. THE ROCK WILL BE CLEANED OR REPLACED WHEN THE SEDIMENT POOL NO LONGER DRAINS OR WHEN THE ROCK IS DISLODGED. BAFFLES WILL BE REPAIRED OR REPLACED IF THEY COLLAPSE. TEAR, DECOMPOSE OR BECOME INEFFECTIVE. THEY WILL BE REPLACED PROMPTLY. SEDIMENT WILL BE REMOVED WHEN DEPOSITS REACH HALF THE HEIGHT OF THE 1ST BAFFLE. FLOATING SKIMMERS WILL BE INSPECTED WEEKLY AND WILL BE KEPT CLEAN.
7. SEDIMENT WILL BE REMOVED FROM THE SEDIMENT BASIN WHEN THE DESIGN STORAGE CAPACITY HAS BEEN HALF FILLED WITH SEDIMENT. ROCK WILL BE CLEANED OR REPLACED WHEN THE SEDIMENT POOL NO LONGER DRAINS OR IF THE ROCK IS DISLODGED. BAFFLES WILL BE REPAIRED OR REPLACED IF THEY TEAR, DECOMPOSE OR BECOME INEFFECTIVE. THEY WILL BE REPLACED PROMPTLY. SEDIMENT WILL BE REMOVED FROM BAFFLES WHEN DEPOSITS REACH HALF THE HEIGHT OF THE 1ST BAFFLE. FLOATING SKIMMERS WILL BE INSPECTED WEEKLY AND WILL BE KEPT CLEAN.
8. ALL SEEDED AREAS WILL BE FERTILIZED, RESEEDED AS NECESSARY, AND MULCHED ACCORDING TO SPECIFICATIONS IN THE VEGETATIVE PLAN TO MAINTAIN A VIGOROUS, DENSE VEGETATIVE COVER. ALL SLOPES WILL BE STABILIZED WITHIN 21 CALENDAR DAYS. ALL OTHER AREAS WILL BE STABILIZED WITHIN 15 WORKING DAYS.
9. FLOCCULATES WILL BE USED TO ADDRESS TURBIDITY ISSUES. THE PUMPS, TANKS, HOSES AND INJECTION SYSTEMS WILL BE CHECKED FOR PROBLEMS OR TURBID DISCHARGES DAILY.

SITE POLLUTANTS NOTES
1. LOCATE AREAS DEDICATED FOR MANAGEMENT OF LAND CLEARING AND DEMOLITION DEBRIS, CONSTRUCTION AND DOMESTIC WASTE, AND HAZARDOUS OR TOXIC WASTE. THIS LOCATION SHALL BE AT LEAST 50' AWAY FROM STORM DRAIN INLETS AND SURFACE WATERS UNLESS IT CAN BE SHOWN THAT NO OTHER ALTERNATIVES ARE REASONABLY AVAILABLE.
2. DUMPING OF PAINT OR OTHER LIQUID BUILDING MATERIAL WASTES IN STORM DRAINS IS PROHIBITED.
3. LITTER AND SANITARY WASTE-THE PERMITTEE SHALL CONTROL THE MANAGEMENT AND DISPOSAL OF LITTER AND SANITARY WASTE FROM THE SITE.
4. LOCATE EARTHEN-MATERIAL STOCK PILE AREAS AT LEAST 50' AWAY FROM STORM DRAIN INLETS AND SURFACE WATERS UNLESS IT CAN BE SHOWN THAT NO OTHER ALTERNATIVES ARE REASONABLY AVAILABLE.
5. CONCRETE MATERIALS ONSITE, INCLUDING EXCESS CONCRETE, MUST BE CONTROLLED AND MANAGED TO AVOID CONTACT WITH SURFACE WATERS, WETLANDS OR BUFFERS. NO CONCRETE OR CEMENT SLURRY SHALL BE DISCHARGED FROM THE SITE.
6. ANY HARDENED CONCRETE RESIDUE WILL BE DISPOSED OF, OR RECYCLED ON SITE, IN ACCORDANCE WITH LOCAL AND STATE SOLID WASTE REGULATIONS.
7. SOIL STABILIZATION SHALL BE ACHEIVED ON ANY AREA OF A SITE WHERE LAND-DISTURBING ACTIVITIES HAVE TEMPORARILY OR PERMANENTLY CEASED ACCORDING TO THE FOLLOWING SCHEDULE:
i. ALL PERIMETER DIKES, SWALES, DITCHES, PERIMETER SLOPES AND ALL SLOPES STEEPER THAN 3 HORIZONTAL TO 1 VERTICAL (3:1) SHALL BE PROVIDED TEMPORARY OR PERMANENT STABILIZATION WITH GROUND COVER AS SOON AS PRACTICABLE BUT IN ANY EVENT WITHIN 7 CALENDAR DAYS FROM THE LAST LAND DISTURBING ACTIVITY.
ii. ALL OTHER DISTURBED AREAS SHALL BE PROVIDED TEMPORARY OR PERMANENT STABILIZATION WITH GROUND COVER AS SOON AS PRACTICABLE BUT IN ANY EVENT WITHIN 14 CALENDAR DAYS FROM THE LAST LAND-DISTURBING ACTIVITY.
8. CONDITIONS-IN MEETING THE STABILIZATION REQUIREMENTS ABOVE, THE FOLLOWING CONDITIONS OR EXEMPTIONS SHALL APPLY:
i. EXTENSIONS OF TIME MAY BE APPROVED BY THE PERMITTING AUTHORITY BASED ON WEATHER OR OTHER SITE-SPECIFIC CONDITIONS THAT MAKE COMPLIANCE IMPRACTICABLE.
ii. ALL SLOPES 50' IN LENGTH OR GREATER SHALL APPLY TO GROUND COVER WITHIN 7 DAYS EXCEPT WHEN THE SLOPE IS FLATTER THAN 4:1. SLOPES LESS THAN 50' SHALL APPLY GROUND COVER WITHIN 14 DAYS EXCEPT WHEN SLOPES ARE STEEPER THAN 3:1, THE 7-DAY REQUIREMENT APPLIES.
iii. ANY SLOPED AREA FLATTER THAN 4:1 SHALL BE EXEMPT FROM THE 7-DAY GROUND COVER REQUIREMENT.
iv. SLOPES 10' OR LESS IN LENGTH SHALL BE EXEMPT FROM THE 7-DAY GROUND COVER REQUIREMENT EXCEPT WHEN THE SLOPE IS STEEPER THAN 2:1.
v. ALTHOUGH STABILIZATION IS USUALLY SPECIFIED AS GROUND COVER, OTHER METHODS, SUCH AS CHEMICAL STABILIZATION, MAY BE ALLOWED ON A CASE-BY-CASE BASIS.
vi. FOR PORTIONS OF PROJECTS WITHIN THE SEDIMENT CONTROL COMMISSION-DEFINED "HIGH QUALITY WATER ZONE" (15A NCAC 04A. 0105), STABILIZATION WITH GROUND COVER SHALL BE ACHIEVED AS SOON AS PRACTICABLE BUT IN ANY EVENT ON ALL AREAS OF THE SITE WITHIN 7 CALENDAR DAYS FROM THE LAST LAND-DISTURBING ACT.

7.8.16

REVISIONS

No./Date	Description	By
R4 08.11.16	CITY TRAFFIC COMMENTS	EJW

DETAILS AND NOTES

MAYFAIRE OFFICE IV
6740 ROCK SPRING ROAD
WILMINGTON, NORTH CAROLINA

TRIPP ENGINEERING, P.C.
419 Chestnut Street
Wilmington, North Carolina 28401
Phone 910-763-5100
Fax 910-763-5631

© 2016 TRIPP ENGINEERING, P.C. NC LICENSE No. C-1427

NORTH CAROLINA PROFESSIONAL SEAL 17374 ENGINEER PHILLIP GREGORY TRIPP

DATE 07-08-16
DESIGN PGT
DRAWN EJW

C4

SHEET 4 OF 4

16001